FEMALE END VIEW

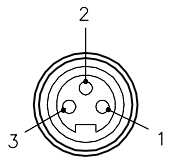

1 = ORANGE/RED
2 = GREEN/YELLOW
3 = WHITE/ORANGE

PANEL CUTOUT

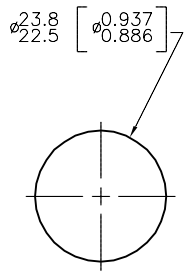

LOCKNUT

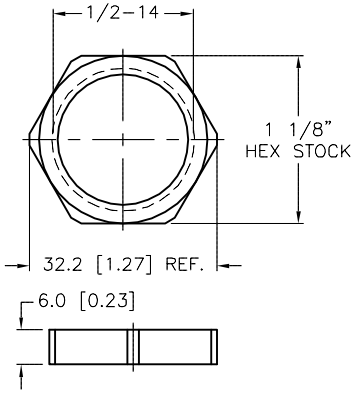

SPECIFICATIONS

CONTACT CARRIER MATERIAL	PVC
CONTACT MATERIAL/PLATING	BRASS or COPPER/GOLD
HOUSING MATERIAL/PLATING	BRASS/NICKEL
GASKET MATERIAL	NITRILE
RATED CURRENT [A]	40.0 A
RATED VOLTAGE [V]	600 VAC
CONDUCTOR INSULATION MATERIAL	PVC
NUMBERS OF CONDUCTORS [AWG]	3x10 AWG
TEMPERATURE RATING	−40°C to +105°C (−40°F to +221°F)
PROTECTION CLASS	MEETS NEMA 1,3,4,6P AND IEC IP67, IP68, IP69K
MAXIMUM PANEL THICKNESS	6.0mm [.236]
APPROVALS AND CERTIFICATIONS	UL 2237, CE

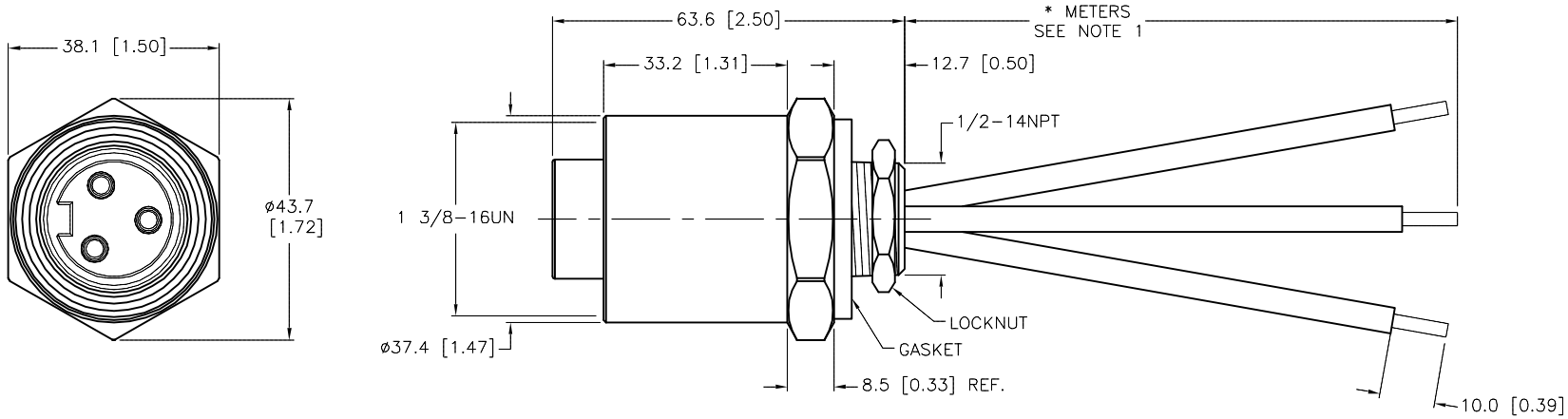

CABLE LENGTH	TOLERANCE *
ALL LENGTHS	+ 4% (OR 50mm) OF LENGTH − 0% (OR 0mm) OF LENGTH WHICHEVER IS GREATER
STRIP LENGTH	**TOLERANCE ***
0−7mm	±0.5mm
8−29mm	±1.0mm
30−49mm	±2.0mm
50−69mm	±3.0mm
70−100mm	±4.0mm
OVER 100mm	±5.0mm
* UNLESS OTHERWISE SPECIFIED	

CAUTION:
RISK OF ELECTRICAL SHOCK
DO NOT DISCONNECT UNDER LOAD

SOURCE DRAWING - FOR REFERENCE ONLY

NOTES:

1. "*" INDICATES LEAD LENGTH IN METERS. CONTACT TURCK TO ORDER SPECIFIC LENGTHS.

2. "/S1205" DESIGNATES CUSTOM COLOR CODE.

REV	DESCRIPTION	BY	DATE	ECO NO.
E	UPDATE RATED CURRENT	NF	04/25/19	69361

RELATED DOCUMENTS
1.
2.
3.
4.

3RD ANGLE PROJECTION

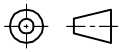

THIS DRAWING IS CONFIDENTIAL AND THE PROPERTY OF TURCK INC. USE OF THIS DOCUMENT WITHOUT WRITTEN PERMISSION IS PROHIBITED.

TURCK

3000 CAMPUS DRIVE
MINNEAPOLIS, MN 55441
1-800-544-7769
(763) 553-7300
(763) 553-0708 fax
www.turck.us

MATERIAL: SEE SPECIFICATIONS

FINISH: SEE SPECIFICATIONS

ALL DIMENSIONS DISPLAYED ON THIS DRAWING ARE FOR REFERENCE ONLY

CONTACT TURCK FOR MORE INFORMATION

DRFT: KMY | DATE: 07/24/14
APVD: E.S. | SCALE: 1=1.3

UNIT OF MEASUREMENT
MILLIMETER [INCH]
DO NOT SCALE THIS DRAWING

DESCRIPTION: GKDF 30−*M/14.5/NPT/S1205

IDENTIFICATION NO.

REV: E

FILE: 777033698

SHEET 1 OF 1